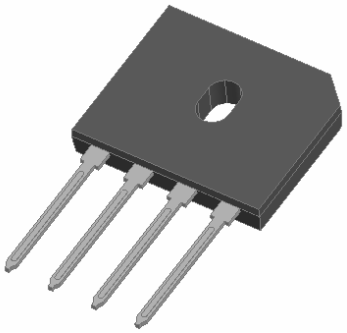
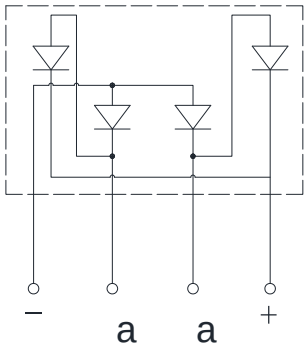
RoHS COMPLIANT





%ULGJH 5HFWLILHUV

)HDWXUHV

- 8/ UHFRJQLWLRQ ILOH (
- *ODVV SDVVLYDWHG FKLS MXQFWLRQ
- ,GHDO IRU SULQWHG FLUFXLW ERDUGV
- +LJK VXUJH FXUUHQW FDSDELOLW\
- 6ROGHU GLS Y & SHDN -(6' %

7\SLFDO $SSOLFDWLRQV

*HQHUDO SXUSRVH XVH LQ $& & ZDYH UHFWLILFDWLRQ
PRQLWRU 79 SULQWHU SRZHU VXSSO\ VZL
DGDSWHU DSSOLFDWLRQ KLJK HIILFLHQF\ DSSOLFDWLR

0HFKDQLFDO 'DWD

- 3DFNDJH %8
  0ROGLQJ FRPSRXQG 8/ 9 HIODPPDELOLW\
  UDWLQJ 5R+6 FRPSOLDQW
- 7HUPLQDOV SODWHG OHDGV VROGHUDEOH SI
  - 67' DQG -(6' %
- 3RODULW\ DUNHG RQ ERG\

v0D[LPXP 5DWLQJV 8QOHVV RWKHUZLVH VSHFLILHG

3$5$0(7(5	6<0%2	81,7	*%8 $	*%8 $	*%8 $	*%8 $	*%8 $	*%8 $	*%8 $
'HYLFH PDUNLQJ FRGH			*%8 $	*%8 $	*%8 $	*%8 $	*%8 $	*%8 $	*%8 $
0D[LPXP 5HSHWLWLYH 3HDN 5HYHUVH 9ROWDJH	95590	9							
0D[LPXP 506 9ROWDJH	9506	9							
0D[LPXP '& EORFNLQJ 9ROWDJH	9'&	9							
$YHUDJH UHFWLILHG)RUZDUG &XUUHQW :LWK KHDWVLQN # +] VLQH ZDYH 5:LWKRXW KHDWVLQN 7D -	7RWRWSXW FXUUHQW ,2	$							
)RUZDUG 6XUJH &XUUHQW 1RQ UHSHWLWLYH # +] +DOI VLQH ZDYH - F\FOH 7M	,)60	$							
)RUZDUG 6XUJH &XUUHQW 1RQ UHSHWLWLYH # PV VTXDUH ZDYH - F\FOH 7M									
&XUUHQW VTXDUHG WLPH # PV"W" PV 7M5DWLQJ RI SHU GLRGH	W	$6							
6WRUDJH WHPSHUDWXUH	7VWJ	-	a						
-XQFWLRQ WHPSHUDWXUH	7M	-	a						
'LHOHFWULF VWUHQJWK # 7HUPLQDOV WR FDVH $&	9GLV PLQXWH	9							
0RXQWLQJ WRUTXH #5HFRPPHQGHG WRUTXH	7RU	NJ FP							

v(OHFWULFDO &KDUDFWHULVWLFV 8QOHVV RWKHUZLVH VSHFLILHG

3$5$0(7(5	6<0%2	81,7	7(67 &21',7,2	*%8 $	*%8 $	*%8 $	*%8 $	*%8 $	*%8 $	*%8 $
0D[LPXP LQVWDQWDQHRXV IRUZDUG YROWDJH GURS SHU GLRGH	9)		9)0 $							
0D[LPXP '& UHYHUVH FXUUHQW D 7M - UDWHG '& EORFNLQJ YROWDJH SHU GLRGH			7M -							
7\SLFDO MXQFWLRQ FDSDFLWDQFH			0HDVXUHG DW 0+] DQG DSSOLHG 5HYHUVH 9ROWDJH RI 9 ' &							

v7KHUPDO &KDUDFWHULVWLFV RWKHUZLVH VSHFLILHG

3$5$0(7(5		6<0%2	81,	*%8 $	*%8 $	*%8 $	*%8 $	*%8 $	*%8 $	*%8 $
7KHUPDO 5HVLVWDQFH	%HWZHHQ MXQFWLRQ DQG DPELHQW :LWKRXW KHDWVLQN	5 - $	- - :	ELHQW						
	%HWZHHQ MXQFWLRQ DQG FDVH :LWK KHDWVLQN	5 - &		FDVH						

1RWH 'HYLFH RQ [PP [$OXPLQXP 3ODWH +HDW

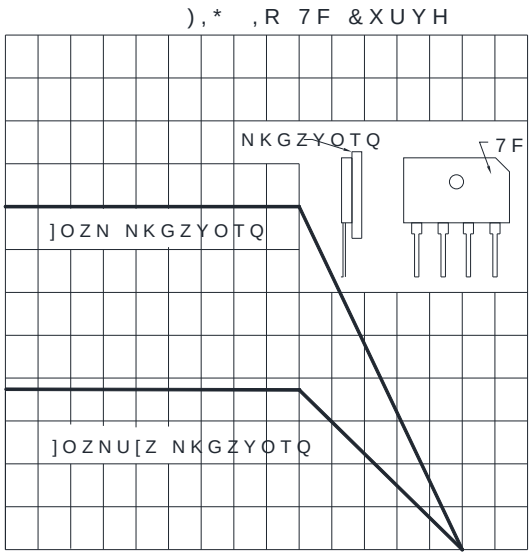
v2UGHULQJ ,QIRUPDWLRQ

35()(5(' 3 1	3$&.,1* &2'(	81,7 :(,*+7	0,1,,080 3$&.$*(SF	,11(5 %2; 48$17,7< S	287(5 &$572 48$17,7< SF	'(/,9(5< 02'(
*%8 $ 7+58 *%8 $ %		$SSUR[LPDWH				

78%

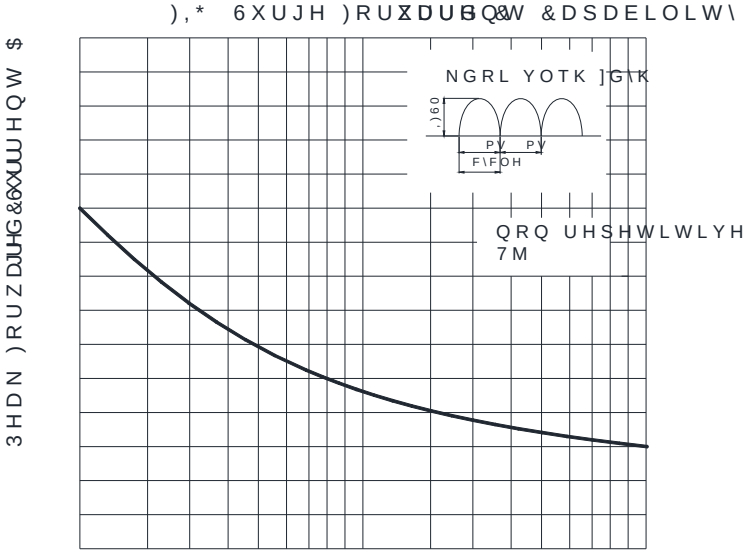
v &KDUDFWHULVWLF &XUYHV

$YHUDJH)RUZDUG 2XWSXW $



&DVH 7HPSHUDWXUH

3HDN)RUZDUG &XUUHQW $



1XPEHU RI &\FOHV

*%8 $ 7+58 *%8 $

'LVFODLPHU

7KH LQIRUPDWLRQ SURYLGHG RQ WKLV VLWH LV IRU JHQHUDO LQIRUPDWLRQDO SXUSRVHV RQOLQH 7HFKQRORJLHV (OHFWURQLF 7HFKQRORJLHV UHJDUGV WR PDNH FKDQJHV WR WKH LQIRUPDWLRQ SURYLGHG RQ WKLV VLWH DW DQ\ WLPH DQG IRU DQ\ UHDVRQ

7KH SURGXFW OLVWHG KHUHLQ LV GHVLJQHG WR FRQIRUP WR FHUWDLQ HTXLSPHQW RU GHYLFHV ZKLFK UHTXLUH KLJK HQHUJ\ FRQVXPSWLRQ DQG PHGLFDO LQVWUXPHQWV VXUJLFDO LQVWUXPHQWV GHYLFHV <DQJMLH RU DQ\RQH RQ LWV EHKDOI ODLPV OLDELOLW\ RU UHVSRQVLELOLW\ RI VDOH

7KLV SXEOLFDWLRQ SURYLGHV LQIRUPDWLRQ RQ WKH VLQURQL\VDWLRQ GHVLQURUXPV DQG LWV SURGXFWV <RX VKRXOG QRW UHOLH VROHO\ RQ WKLV LQIRUPDWLRQ <DQJMLH FRQVXOW \RXU QHDUHVW <DQJMLH RIILFH IRU IXUW